卷册检索号
30-B003701S-S0101-001

巴基斯坦默蒂亚里—拉合尔
±660kV 直流输电工程

拉合尔±660kV 换流站
水工施工图总说明

中 国 电 力 工 程 顾 问 集 团 华 东 电 力 设 计 院 有 限 公 司

工程设计综合类甲级 A131000025　工程勘察综合类甲级 B131000025

2020 年 01 月　　上 海

巴基斯坦默蒂亚里—拉合尔
±660kV 直流输电工程

拉合尔±660kV 换流站
水工施工图总说明

批　　准：

审　　核：

校　　核：

编　　制：

目　　录

1 设计主要标准和依据 Main Design Standards and Basis.....2
1.1 主要标准 Main Standards.....2
1.2 主要设计原则 Main Design Principles.....2
2 设计内容　Design Content.....3
2.1 生活给水系统.....3
2.2 生活排水系统.....3
2.3 工业给水系统.....3
2.4 雨水排水系统.....3
3 站址概述 Site Overview.....4
4 系统设计 System Design.....7
4.1 水源 Water Resource.....7
4.2 生活给水系统 Domestic water supply system.....8
4.3 生活排水系统 Domestic drainage system.....11
4.4 工业给水系统 Industrial water supply system.....11
4.5 雨水排水系统 Stormwater drainage system.....21

1 设计主要标准和依据 Main Design Standards and Basis

1.1 主要标准 Main Standards

中华人民共和国国家标准《建筑给水排水设计规范》GB50015－2003(2009 年版)

中华人民共和国电力行业标准《变电所给水排水设计规程》DL/T 5143-2002

中华人民共和国国家标准《室外给水设计规范》GB 50013-2006

中华人民共和国国家标准《室外排水设计规范》GB 50014-2006

《高压直流换流站设计技术规定》 DL/T 5223-2005

PRC national standard design code for building water supply and drainage GB 50015-2003 (2009 edition)

Power industry standard of the People's Republic of China "design code for substation water supply and drainage" DL/T 5143-2002

National standard of the People's Republic of China "design code for outdoor water supply" GB 50013-2006

National standard of the People's Republic of China, code for design of outdoor drainage, GB 50014-2006

Technical regulations for HVDC converter station design DL/T 5223-2005

1.2 主要设计原则 Main Design Principles

根据本工程初步设计审查意见，

阀冷却：阀外冷却采用水冷却方式。

水源：站内打井取水方案，设置能容纳 5 天生产用水量的水池（3000m^3）作为备用水源，站内需设置水处理设施。

按评审意见实施。

According to the preliminary design review opinions of the project,

Valve cooling: water cooling is adopted for external cooling.

Water source: the plan of drilling Wells and drawing water in the station is to set up a tank (3000m3) that can hold the production water consumption for 5 days as the standby water source, and set up water treatment facilities in the station.

The project shall be implemented according to the evaluation opinions.

2 设计内容 Design Content

2.1 生活给水系统

包括 50m3 不锈钢生活水箱、生活变频供水设备、生活水管网及建筑物生活用水等，同时在主要路段设置绿化给水栓

2.2 生活排水系统

包括建筑物生活污水/废水排水系统、站区生活污水管网等

2.3 工业给水系统

2×1500m^3 工业水池、工业水泵、工业供水管网、外冷水处理设备等

2.4 雨水排水系统

包括雨水口、雨水检查井、雨水排放管网、雨水排水口等

2.1 domestic water supply system (including 50m^3 stainless steel domestic water tank, domestic variable frequency water supply equipment, domestic water pipe network and domestic water supply for buildings, etc.; meanwhile, green water supply plugs are set on main road sections)

2.2 domestic drainage system (including building domestic sewage/wastewater drainage system, station domestic sewage network, etc.)

2.3 industrial water supply system (2×1500m^3 industrial water tank, industrial water pump, industrial water supply pipe network, external cold water treatment equipment, etc.)

2.4 stormwater drainage system (including stormwater inlet, stormwater inspection well,

stormwater drainage network, stormwater outlet, etc.)

3 站址概述 Site Overview

拉合尔换流站位于拉合尔市西南约 65.0km。站址与拉合尔市气象站地形地貌较为相似，且属同一气候区，故气象资料参照该气象站数据。拉合尔市气象站位于北纬 31°33′，东经 74°20′，海拔 214m。

巴基斯坦区域总体上属亚热带季风气候，习惯上巴基斯坦的气候分为四季：3-4 月为春季，这两个月的气候不热不冷，比较温和，但干燥；5-8 月为夏季，其中 6 月份的气温最高，有时高达 45°；7、8 两月多雨，因此通常又称 7、8 月为雨季；9-10 月为秋季；11-2 月为冬季。

拉合尔气象站常规气象资料如下（除个别值外，资料统计年限为 1980-2010）：

年平均气温	23.9℃
极端最高气温	48℃(2007.6.10)
极端最低气温	-2.2℃(2008.1.22)
10%湿球温度	27.0℃
10%干球温度	33.0℃
年平均气压	983.1hPa
年平均相对湿度	57%
年平均风速	1.6m/s
实测最大风速	40.7m/s（3s 瞬时）
平均降水量	679.7mm
24 小时最大降雨量	274mm（2014.9.6）
年平均蒸发量	1623.6mm
主导风向	NW

根据巴基斯坦建筑荷载规范，巴基斯坦基本风速为不小于 120km/h，沿海不小于 130km/h。结合本工程前期会议纪要，本工程设计风速采用 160km/h（对应 10m 高 10min

平均风速约为 31.3m/s），设计覆冰厚度为 0mm。

拉合尔市暴雨强度公式：

根据 MITHI 气象站降水资料，累年平均降水量为 91.4mm，最大一日降水量为 255.2mm，最大 10min 降水量约为 15mm，根据以上数据建议本工程采用以下暴雨强度公式：

$$i = \frac{8.376(1+1.907\lg p)}{(t+12)^{0.7843}}$$

公式中符号意义：

i—暴雨强度，mm/min；

t—历时，min；

P—重现期，年（a）。

Lahore converter station is located about 65.0km southwest of Lahore city. The site is similar to the topography of the weather station in Lahore, and belongs to the same climatic region, so the meteorological data refer to the data of the weather station. The weather station in Lahore is located at 31°33 'n and 74°20' e, with an altitude of 214m.

Generally speaking, Pakistan has a subtropical monsoon climate. Traditionally, the climate of Pakistan is divided into four seasons. Summer is from may to August, with the highest temperature in June, sometimes as high as 45°. July and August are rainy, so it is usually called the rainy season in July and August. Autumn is from September to October; Winter is from November to February

The conventional meteorological data of the meteorological station in Lahore are as follows (except for individual values, the statistical years are 1980-2010) :

The average annual temperature is 23.9℃

Extreme maximum temperature 48℃(2007.6.10)

Extreme minimum temperature -2.2℃(2008.1.22)

10% wet bulb temperature 27.0℃

10% dry bulb temperature 33.0℃

The average annual pressure is 983.1hPa

The average annual relative humidity is 57%

The average annual wind speed is 1.6m/s

Measured maximum wind speed 40.7m/s (3s instantaneous)

The average precipitation is 679.7mm

24h maximum rainfall 274mm (2014.9.6)

The average annual evaporation is 1623.6mm

Dominant wind direction NW

According to the Pakistan building load code, the basic wind speed in Pakistan is not less than 120km/h and the coastal area is not less than 130km/h. According to the meeting minutes of the early stage of the project, the designed wind speed of the project is 160km/h (the average wind speed of 10min at a height of 10m is about 31.3m/s), and the designed ice cover thickness is 0mm.

Formula for rainstorm intensity in Lahore:

According to the precipitation data of MITHI weather station, the average annual precipitation is 91.4mm, the maximum one-day precipitation is 255.2mm, and the maximum 10min precipitation is about 15mm. Based on the above data, it is suggested to adopt the following formula for rainstorm intensity in this project:

$$i = \frac{8.376(1+1.907\lg p)}{(t+12)^{0.7843}}$$

Symbolic meaning in the formula:

I -- storm intensity, mm/min;

T -- duration, min;

P - recurrence period, year (a).

4 系统设计 System Design

4.1 水源 Water Resource

站址附近可利用地表水源为 Ravi 河。根据《印度河水条约》，Ravi 河水资源划属印度控制。巴基斯坦于上世纪修建引水渠，从杰纳布河引水补充至 Balloki Barrage 拦河坝上游。但经过多年运行，该引水渠淤积严重，已不能供水，且目前巴方无清淤计划。这导致目前 Balloki Barrage 拦河坝的来水只能依靠上游。

拉维河河道较为宽浅，主流靠左岸，而站址在河流右岸，不利于取水。而且站址周围段河流河岸稳定，变化强烈。

综上所述，结合前期会议纪要，拉合尔换流站水源采用打井取地下水方式。

根据供水水文地质勘察报告，水源水量能够满足本工程的用水要求。

本工程工业、消防用水采用经过紫外线消毒处理后的深井水；生活水源为经过反渗透处理后的深井水。

本工程共设 2 口水井及深井泵房，均由土建施工单位完成。根据《供水水文地质勘察报告》，本工程在厂区范围内设置两口抽水井，抽水井间距约 300m，抽水井静水位最大埋深 6m，开采井群抽时水位降 5m，由于目前深井泵尚未招标，暂按水泵进水口淹没深度在动水位以下 20m 计，水泵进水口设置在埋深约 31m。拉合尔换流站生活水源采用打井取地下水的方式获得，本工程设置的 2 眼井（一用一备），均设置在换流站内，分别位于交流场、直流场南侧。地下水经深井潜水泵提升至地下水处理设备区域，经超滤+反渗透处理工艺后，送至站区不锈钢生活水箱中，作为后续生活用水。

本工程设置完整的地下水净水装置 1 套（2 系列）：包括地下水处理装置；地下水处理加药装置；系统管路及阀门、仪表、支吊架；系统控制柜；该装置内所需的全部电缆和安装配件等

2 台深井潜水泵一运一备，且定时自动切换运行。单泵额定参数：Q=60m³ /h,H=52m。

The available surface water near the site is the Ravi river. Ravi river resources are subject to Indian control under the Indian river treaty. Pakistan built aqueducts in the last century to divert water from the jenab river to the upper reaches of the Balloki Barrage. However, after years of operation, the diversion canal has been seriously silted up and can no longer supply water, and there is no dredging plan in Pakistan. This has resulted in the current Balloki Barrage being fed upstream.

The ravi river is relatively wide and shallow, with the main stream on the left bank and

the site on the right bank of the river, which is not conducive to water collection. Moreover, the river Banks around the site are stable and change strongly.

To sum up, combined with the minutes of the previous meeting, the water source of Lahore converter station is extracted from underground water by drilling Wells.

According to the water supply hydrogeological survey report, the water source can meet the water requirements of the project.The water source for industry, life and fire protection is deep well water after reverse osmosis treatment.

There are two water Wells and deep well pump room in this project, all of which are completed by civil construction unit. According to the water supply hydrogeological survey report, the project within the scope of the factory set up two pumping Wells, pumping well spacing of about 300 m, the maximum static water level of pumping well depth of 6 m, mining group of smoke when the well water level drop 5 m, due to the deep well pump has not been bidding, covered by temporarily pump inlet depth in dynamic water level under the 20 m, water pump inlet set about 31 m in depth. The domestic water source of Lahore converter station is obtained by drilling Wells to extract groundwater. The two Wells (one for use and one for backup) set up in this project are all set in the converter station, respectively located in the south side of the ac field and the dc field. The groundwater is raised to the area of the groundwater treatment equipment by deep well submersible pump, and after ultrafiltration + reverse osmosis treatment process, it is sent to the stainless steel domestic water tank in the station area as the follow-up domestic water.

This project is equipped with a complete set of groundwater water purification equipment (series 2) : including groundwater treatment equipment; Charging device for groundwater treatment; System pipelines and valves, instruments, support and hangers; System control cabinet; All cables and mounting accessories are required in the device

Two deep-well submersible pumps are in one operation and one standby, and the automatic switching operation is scheduled. Rated parameters of single pump: Q=60m^3/h, H=52m.

4.2 生活给水系统 Domestic water supply system

换流站总人员编制按 50 人计。

生活生活用水(包括浴室、绿化及清洁用水等)日用水量约 255.2m^3/d，最大小时用水量约 7.78m^3/h。（参见表 4.2.1-1）

The total number of personnel in the converter station shall be 50.

Daily water consumption (including bathroom, greening and cleaning water, etc.) is about 255.2m3/d, and the maximum hourly water consumption is about 7.78m3/h. (see table 4.2.1-1)

表 4.2.1-1 生活用水量表

编号	项 目	用水量标准	时变化系数	日用水量 m^3/d	最大小时用水量 m^3/h	备 注
	生产人员生活用水	40 L/人·班	2.5	3.6	0.38	按 90 位职工计
	生产人员淋浴用水	60 L/人·次		5.4	5.4	按 90 位职工计，用水时间为 1h
	浇洒道路绿化用水	1.0 L/m^2·日		222		按 22 公顷计
	冲洗汽车用水	400-600 L/辆·日		1		按大车 1 辆，小车 1 辆
	未预见水量	总用水量的 10%	2	23.2	2	
	合计			255.2	7.78	

自地下水处理装置 DN150mm 的供水干管上引一根 DN100mm 的供水管将水供至 50m^3 不锈钢生活水箱。通过 50m^3 不锈钢水箱吸水后向全站供生活用水。

生活变频调速供水设备包括生活变频水泵 PUM20-5 型 2 台，参数为 Q=25m^3/h，H=0.40m；气压隔膜罐 200L 一套、变频装置一套以及进出口阀门、止回阀、反法兰、压力表等配件。50m^3 不锈钢生活水箱、生活变频调速供水设备均布置在综合泵房内。

站区生活供水管网干管为 DN100mm。在控制楼和建维区内设生活给水系统，分别

接自附近的站区生活水管网。

Table 4.2.1-1 Domestic Water Consumption Scale

No.	Project	Water consumption standard	Time variation coefficient	Daily water consumption m^3/d	Maximum hourly water consumption m^3/h	Note
	Domestic Water	40L/person·class	2.5	3.6	0.38	90 employees
	Shower Water	60L/person·pertime		5.4	5.4	1h for each, total 90 employees
	Green belt sprinkling	1.0 $L/m^2·d$		222		22 hectares
	Water for car washing	400-600 L/set·d		1		1 vehicle,1 car
	Unforeseen amount	10% of total	2	23.2	2	
	合计			255.2	7.78	

A DN100 water supply pipe is connected from the main water supply pipe of the DN150mm groundwater treatment unit to supply water to the $50m^3$ stainless steel domestic water tank. After absorbing water through 50m3 stainless steel water tank, it supplies domestic water to the whole station.

The household variable frequency adjustable speed water supply equipment includes two pumps, PUM20-5, with the parameters $Q=25m^3/h$ and H =0.40m. Pressure diaphragm tank 200L set, a set of frequency conversion device and import and export valves, check valves, anti-flange, pressure gauge and other accessories. The 50m3 stainless steel domestic water

tank and domestic variable frequency adjustable speed water supply equipment are arranged in the comprehensive pump room.

The main pipe of domestic water supply network in the station area is DN100mm. A domestic water supply system is provided in the control building and the construction area, which are connected to the domestic water network in the nearby station area.

4.3 生活排水系统 Domestic drainage system

建筑物室内采用污水、废水分流排放，室外建筑物排出的生活污、废水合流，经过站内污水管网汇总后排至生活污水处理装置集中处理，达到《污水综合排放标准》GB8978-1996 中一级标准后，直接排入站区雨水下水道。站区生活污水管网的管材采用钢筋混凝土排水管。污水调节池为 7.5m×5m×5.7m(深)。生活污水处理装置 2 套，单套处理能力为 $3m^3/h$。埋地式布置，尺寸为 10.5m×6m×3.3m(长×宽×深)。

The indoor sewage and waste water are discharged by diversion, while the domestic sewage and waste water from the outdoor buildings are discharged by combination, which is collected by the sewage network in the station and then processed by the domestic sewage treatment device. After reaching the "comprehensive sewage discharge standard" gb8978-1996, it is discharged directly into the station rainwater sewer. The pipes of the domestic sewage network in the station area are reinforced concrete drain pipes. The sewage treatment tank is 7.5m×5m×5.7m(deep). 2 domestic sewage treatment devices, each with a capacity of 3m3/h. Buried layout, size 10.5m×6m×3.3m (length× width ×depth).

4.4 工业给水系统 Industrial water supply system

本工程共设 2 个阀组，分别为极 1 阀组、极 2 阀组。每个阀组设 1 套水冷却系统，包括工业给水系统、闭式冷却塔、外冷水处理系统、内冷水处理设备（广州高澜节能技术股份有限公司设计范围）等。

工业给水系统主要用于补充闭式冷却塔外冷却循环水在运行过程中的蒸发、风吹和排污损失。工业给水系统的水源为市政自来水，采用细砂过滤器进行预处理后供至外冷水处理系统。

自 1 根 DN150mm 的供水干管上各引 2 根 DN100mm 的供水管至 2×$1500m^3$ 工业水

池。本工程共设有 2 组冷却塔，每组冷却塔对应 2 台工业水泵（1 用 1 备）、1 套外冷水处理设备。综合水泵房内共设置 4 台工业水泵。工业水泵型号为：CRI20-5，参数为：Q＝19m^3/h，H＝59.8m，N＝5.5kW。

阀冷系统采用氮气密封技术，通过氮气回路来维持系统的水质稳定和压力恒定。

冷却系统主要由主循环水泵、闭式冷却塔及其辅助设备、去离子装置、脱气罐、电加热器、膨胀水箱、过滤器、补充水泵、配电及控制等设备组成。

内冷水在晶闸管换流阀内加热升温后，由内冷水循环水泵驱动进入室外密闭蒸发式冷却塔内的换热盘管，喷淋水泵从室外地下水池抽水均匀喷洒到冷却塔的换热盘管表面，喷淋水吸热后形成的水蒸汽通过冷却塔所配风机排至大气，在此过程中，换热盘管内的冷却水将得到冷却，降温后的冷却水由循环水泵再送至换流阀，如此周而复始地循环。

There are two valve groups in this project, which are pole 1 valve group and pole 2 valve group. Each valve group is equipped with a set of water cooling system, including industrial water supply system, closed cooling tower, external cold water treatment system, internal cold water treatment equipment (design scope of Guangzhou Goaland Energy Conservation Tech Co.,Ltd.), etc.

Industrial water supply system is mainly used to supplement evaporation, wind blowing and sewage loss of cooling circulating water outside closed cooling tower during operation. The water source of the industrial water supply system is municipal tap water, which is pretreated with fine sand filter and then supplied to the external cold water treatment system.

2 DN100mm supply pipes shall be connected from 1 DN150mm main supply pipe to 2×1500m3 industrial pool. There are 2 sets of cooling towers in this project, and each set of cooling towers corresponds to 2 industrial water pumps (1 for use and 1 for standby) and 1 set of external cold water treatment equipment. A total of 4 industrial pumps are set up in the comprehensive pump room. Industrial water pump model: cri20-5, parameters: Q = 19m^3/h, H= 59.8m, N = 5.5kw.

The valve cooling system adopts nitrogen sealing technology to maintain water quality stability and pressure constant through nitrogen loop.

The cooling system mainly consists of main circulating water pump, closed cooling tower and auxiliary equipment, deionizing device, degassing tank, electric heater, expansion water tank, filter, supplementary water pump, power distribution and control equipment.

In cold water in the thyristor converter valve after heating up, from the cold water circulating pump drive into the outdoor airtight evaporative cooling tower heat exchange coil, spray pump underground pools of water pumping from outdoor spray evenly to the cooling tower heat exchange coil surface, spray water absorption after the formation of the water vapor through the cooling tower fan to the atmosphere, and in the process, so the heat exchange coil cooling, cooling water will be cooled by circulating pump of cooling water and then sent to the converter valve, so the cycle to cycle.

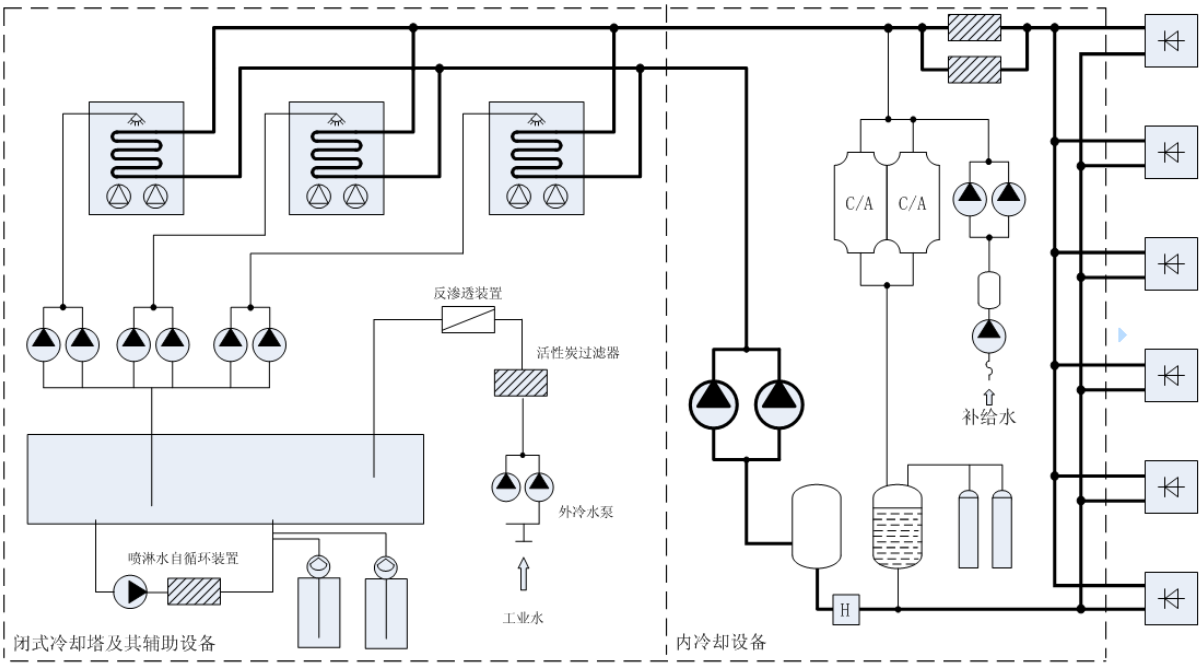

图 4-1 阀冷系统流程简图

Figure 4-1 flow diagram of valve cooling system

表 4-1 换流阀对阀冷系统的设计要求一览表

名称	参数	备注
冷却系统型号	LWW5230-378F	
冷却系统额定冷却容量	5230kW	
进阀温度（设计值）	44℃	
进阀温度高报警设定值	46℃	
进阀温度高跳闸设定值	61℃	
进阀温度低设计值	15℃	

名称	参数	备注
进阀温度低报警设定值	10℃	
阀厅进出水温差	≤12℃	
冷却介质	去离子水	
进阀额定流量	105L/s	
进阀流量低报警设定值	94 L/s	
进阀流量高报警设定值	115L/s	
去离子水处理回路额定流量	2.78L/s	可调整
正常（主循环）电导率值	≤0.5μ S /cm	
电导率值(报警)	＞0.5μS/cm	
电导率值(二级报警)	≥0.7μS/cm	
正常（去离子回路）电导率值	＜0.1μ S /cm	
pH 值	7±0.25	
阀体额定流量时压降	0.3MPa	
阀冷设备设计压力	1.0MPa	
阀冷设备测试压力	1.5MPa	
主循环过滤精度	100μm	
去离子回路过滤精度	5μm	
冷却介质总容量	约 27000L	

表 4-2 冷却系统的主要设计参数及系统配置一览表

名称	参数	备注
系统配置说明		
闭式冷却塔	3 台	换热盘管不锈钢 316L
主循环泵	1 用 1 备 配软启动器	不锈钢 316
补水泵	1 用 1 备	不锈钢 316
原水泵	1 台	不锈钢 316
喷淋泵	1 用 1 备	不锈钢 316
排污泵	1 用 1 备	不锈钢 316
膨胀罐	2 个	不锈钢 304L
离子交换器	2 个	不锈钢 316L
脱气罐	1 个	不锈钢 304L
电加热器	4 台	不锈钢 316
原水罐	1 个	不锈钢 304L
加药装置	1 套	不锈钢 304L

活性炭过滤器	1 套	不锈钢 304L
反渗透装置	1 套	组合架不锈钢 304L
旁滤循环泵	1 用 1 备	不锈钢 316
砂滤器	1 套	不锈钢 304
外冷补水泵组	1 套	共 2 台，一用一备
反洗泵组	1 套	共 2 台，1 用 1 备
主过滤器	1 用 1 备	不锈钢 316L
控制柜	1 套	包括控制单元柜、冷却塔动力柜、交流电源柜等

本工程每个阀冷系统选用三台冷却塔，每台冷却塔容量为总容量的 50%，即冷却系统有 3×50%的冷却容量冗余配置。正常情况下 3 台冷却塔均保持运行，如某台冷却塔发生故障退出运行，则另 2 台冷却塔将提高其冷却风机的转速以确保冷却效果。在室外气温降低或换流阀负荷较小的情况下，可以通过调节冷却塔运行台数和变频调速风机的转速来实现对进阀温度的精确控制。

为保证内冷却水回路中保持压力的恒定，设置一氮气稳压系统以维持整个冷却系统的压力。为降低阀组承压，提高阀组的运行安全，冷却水回路将阀组布置在循环水泵入口端。

内冷却水补水回路主要由补水泵、补水过滤器及离子交换器等组成。冷却系统运行时，当膨胀水箱的水位低于设定值，则补充水泵会自动启动进行补水。补充水为外购的纯水/蒸馏水，补充水经补水泵驱动先经过补水过滤器，再经过离子交换器以保证补充水的电导率满足换流阀要求。

为了控制进入换流阀内冷却水的电导率，在主循环回路上并联一水处理回路。水处理回路主要由一用一备的离子交换器和交换器出水段的精密过滤器组成。系统运行时，部分内冷却水将从主循环回路旁通进入水处理装置进行去离子处理，去离子后的内冷却水其电导率将会降低，处理后的内冷却水再回至主循环回路。通过水处理装置连续不断地运行，内冷却水的电导率将会被控制在换流阀所要求的范围之内。同时为防止交换器中的树脂被冲出而污染冷却水水质，在交换器出水口设置一精密过滤器。

冷却塔运行时，喷淋水不断蒸发，为了保证冷却塔喷淋水系统的正常运行，在室外设置一个起缓冲作用的喷淋水池，根据水池液位进行自动补水。为防止长期喷水而在热交换盘管外表面产生结垢现象，需要对喷淋水进行处理，喷淋水补水进水池之前需进行

活性炭过滤器过滤及反渗透脱盐处理。同时为控制喷淋水水质设置一旁滤循环回路使用砂滤器对喷淋水池中的水不断循环过滤。为了控制喷淋水的浓缩倍数，可通过排掉一部分喷淋水，补充新鲜水，以更好地控制喷淋水的水质。必要时向喷淋水中设置加药装置，以稳定喷淋水水质。

闭式蒸发式冷却塔、水处理装置、膨胀罐、水泵、管道及阀门等设备中一切与内冷却水接触的物质均采用不锈钢材料，系统内还设有过滤器过滤杂质，从而保证了内冷却水有很高的洁净度。

阀外冷系统设置就地控制和中央监控，自动控制采用 PLC，控制器将冷却系统进出阀温度、进出阀压力、电导率、流量、水池水位等参数将进行监测、显示，阀系统的主要设备、动力和控制电源、传感器及控制器均设置 100%冗余，与直流控制和保护的数字通信接口也为冗余配置，当阀冷控制系统故障时将自动切换到备用系统。

Table 4-1 list of design requirements of valve cooling system for converter valves

Name	Parameter	Note
Cooling system type	LWW5230-378F	
Rated cooling capacity of cooling system	5230kW	
Inlet valve temperature (design value)	44℃	
Inlet valve temperature high alarm set value	46℃	
Inlet valve temperature high tripping set value	61℃	
Inlet valve temperature low design value	15℃	
Low inlet valve temperature alarm setting value	10℃	
Valve hall inlet and outlet water temperature difference	≤12℃	
Cooling medium	Deionized water	
Inlet valve rated flow rate	105L/s	
Low alarm value for inlet valve flow	94 L/s	
High alarm value of	115L/s	

Name	Parameter	Note
inlet valve flow		
Rated flow rate of deionized water treatment circuit	2.78L/s	adjustable
Normal (main cycle) conductivity value	≤0.5μ S /cm	
Conductivity value (alarm)	＞0.5μS/cm	
Conductivity value (level 2 alarm)	≥0.7μS/cm	
Normal (deionized loop) conductivity value	＜0.1μ S /cm	
pH	7±0.25	
Pressure drop at valve body rated flow	0.3MPa	
Valve cooling equipment design pressure	1.0MPa	
Valve cooling equipment to test pressure	1.5MPa	
Main cycle filtering accuracy	100μm	
Deionizing loop filtration accuracy	5μm	
Total capacity of cooling medium	About 27000L	

Table 4-2 main design parameters and system configuration list of cooling system

Name	Parameter	Note
System configuration instructions		
Closed cooling tower	3 set	Heat exchange coil stainless steel 316L
The main circulation pump	1 work 1 standby With Soft starter	Stainless steel 316
Water supply pump	1 work 1 standby	Stainless steel 316
Raw water pump	1 pump	Stainless steel 316
Spray pump	1 work 1 standby	Stainless steel 316
Sewage pump	1 work 1 standby	Stainless steel 316
Expansion device drum	2set	Stainless steel 304L
Ion exchanger	2set	Stainless steel 316L

degassing tank	1set	Stainless steel 304L
Electric heater	4 set	Stainless steel 316
Raw water tank	1set	Stainless steel 304L
Dosing system	1set	Stainless steel 304L
Activated carbon filter	1set	Stainless steel 304L
Reverse osmosis unit	1set	Combination frame stainless steel 304L
Bypass circulating pump	1 work 1 standby	Stainless steel 316
Sand filter	1set	Stainless steel 304
External cooling water supply pump	1set	2 pumps, 1 work 1 standby
Backwashing pump group	1set	2 pumps, 1 work 1 standby
Main filter	1 work 1 standby	Stainless steel 316L
Control cabinet	1set	Including control unit cabinet, cooling tower power cabinet, ac power cabinet

1 set of control cabinet includes control unit cabinet, cooling tower power cabinet, ac power cabinet, etc

In this project, three cooling towers are selected for each valve cooling system, and the capacity of each cooling tower is 50% of the total capacity, that is, the cooling system has a redundant configuration of cooling capacity of 3×50%. Under normal conditions, the three cooling towers are kept in operation. If one cooling tower fails to operate, the other two cooling towers will increase the speed of their cooling fans to ensure cooling effect. When the outdoor temperature drops or the converter valve load is small, the temperature of the inlet valve can be precisely controlled by adjusting the number of cooling tower and the speed of the variable frequency speed regulating fan.

In order to keep the pressure constant in the inner cooling water loop, a nitrogen pressure stabilizing system is set up to maintain the pressure of the whole cooling system. In order to reduce the pressure of the valve set and improve the safety of the operation of the valve set, the cooling water loop shall arrange the valve set at the inlet of the circulating pump.

The inner cooling water supply loop is mainly composed of water supply pump, water supply filter and ion exchanger. When the cooling system is running, when the water level of the expansion tank is lower than the set value, the refill pump will start automatically to replenish water. The replenishment water is purchased pure water/distilled water. The replenishment water is driven by the replenishment pump through the replenishment filter and then through the ion exchanger to ensure that the conductivity of the replenishment water meets the requirements of the converter valve.

In order to control the conductivity of cooling water into the converter valve, a water treatment circuit is connected in parallel to the main circulation circuit. The water treatment circuit is mainly composed of a standby ion exchanger and a precise filter at the outlet of the exchanger. When the system is in operation, part of the internal cooling water will pass from the main circulation back to the roadside to the water treatment device for deionization treatment. The conductivity of the internal cooling water after deionization will be reduced, and the treated internal cooling water will be returned to the main circulation loop. Through continuous operation of the water treatment unit, the conductivity of the internal cooling water will be controlled within the range required by the converter valve. At the same time, in order to prevent the resin in the exchanger from being flushed out and contaminating the water quality of cooling water, a precise filter is set at the outlet of the exchanger.

During the operation of the cooling tower, the spray water continuously evaporates. In order to ensure the normal operation of the cooling tower's spray water system, a spray pool with buffering effect is set outdoors to automatically replenish water according to the level of the pool. In order to prevent long-term water spraying and produce scaling phenomenon on the outer surface of heat exchange coil, spray water needs to be treated, spray water needs to be filtered by activated carbon filter and reverse osmosis desalination before entering the tank. At the same time, in order to control the spray water quality, a side filter circulation loop is set up and sand filter is used to continuously circulate and filter the water in the spray tank. In order to control the concentration of spray water, part of the spray water can be removed to supplement fresh water, in order to better control the quality of spray water. When necessary, a dosing device is arranged to the spray water to stabilize the spray water quality.

Closed evaporative cooling tower, water treatment device, expansion tank, water pump, pipeline and valve and other equipment in contact with the internal cooling water all use stainless steel material, the system is also equipped with filters to filter impurities, so as to ensure the internal cooling water has a high degree of cleanliness.

Valve outside cold system set the local control and central control, PLC automatic control, the controller will cooling system in and out of the valve temperature, pressure, conductivity, flow in and out of the valve, tank water level will monitor, display, parameters, such as the main equipment, power and control power of valve system, sensor and controller are set 100% redundancy, and dc control and protection of digital communication interface for redundant configuration, when valve is a failure in the control system will automatically switch to the cold standby system.

4.4.1 阀冷废水排放系统

用于接收全站阀冷系统及给水处理装置的 RO 浓水、过滤器反洗水、旁滤排放水，给水装置超滤反洗水、RO 反洗水、化学清洗水等，最终达标排放至站外拉维河。

阀冷废水排放系统设水池 1 座，有效容积约为 600m³ 。池顶自吸泵共 2 台，单台流量为 20m³ /h，扬程 40m，排放母管采用衬塑钢管，管径为 DN65。

It is used to receive the RO concentrated water, filter backwash water, side filter discharge water of the whole station's valve cooling system and the water supply treatment device, as well as the ultrafiltration backwash water, RO backwash water, chemical cleaning water of the water supply device, and finally discharge to the ravi river outside the station.

The valve-cooling wastewater discharge system is equipped with a pool with an effective volume of about 600 m³ . There are two self-priming pumps at the top of the tank, with a single flow rate of 20 m³ /h and a head of 40m. The discharge master pipe is lined with plastic steel pipe, and the pipe diameter is DN65.

4.4.2 消防应急补水系统

为保证运行安全及消防加强，本工程设置两套消防应急补水系统，发生火灾时将换流站工业水池内工业水提升至消防水池。设置消防应急补水泵 4 台(2 用 2 备），每座工业水池对应 2 台（1 用 1 备），单泵参数：450 m³ /h，H=15m，N=30kW.共设置真空引水罐 2 台，单台有效容积为 5m³ .

In order to ensure the safety of operation and strengthen fire control, this project sets up two fire emergency water replenishment systems. In case of fire, the industrial water in the converter station's industrial pool will be lifted to the fire control pool. 4 fire emergency water supply pumps (2 for use and 2 for standby) are set, and 2 for each industrial pool (1 for use and 1 for standby). Single pump parameters: 450 m³/h, H=15m, N=30kW.

4.5 雨水排水系统 Stormwater drainage system

本工程站内雨水设计流量按照站址所在的拉合尔地区暴雨强度公式计算确定：

暴雨强度公式：

$$i = \frac{8.376(1+1.907\lg p)}{(t+12)^{0.7843}}$$

其中设计重现期 P=3 年，t=20min

经计算 q= 175.99 L/s·ha

围墙内面积 24ha，站内总汇水面积 F1＝24ha，径流系数取 φ1=0.6。则：雨水设计流量 Q1=qφ1F1= 2534.26L/s= 9123.32m^3/h。

本工程平均填高约 2.6m，站址处地势平坦，站址平整后平均地坪标高约为 193.4m，雨水接纳水体（待落实）相对于站内设计高程高差不足以采用重力流的排水方式，把站内雨水、工业废水顺利排出。因此，本工程拟采用机械抽排方式，站内雨、废水先排入雨水泵站，再由其内的雨水泵抽排至 6km 外的拉维河。

站区内雨水经雨水口，雨水检查井流至站区雨水管网。在站区西侧设置地下式雨水泵池一座，泵池内共设有四台卧式离心泵，暂定将雨水排至紧邻站址西侧。雨水泵站内共安装 4 台雨水泵（2 大 2 小）。雨水经雨水口，雨水检查井流至雨水泵站。雨水泵站拦污栅为斜立式布置，用以清除水源中粗大污物、集中污物和其它飘浮物，整套设备为室外露天布置。泵站按无人值班设计，各泵与前池水位联锁，轮流自动投入或停运。

为了节约用水，雨水泵房内设两台小泵作为绿化水泵，当天气晴好时，可将雨水泵池内积水作为站区绿化用水。绿化水泵型号为：WQK5-15-0.75 型，流量 Q=5m^3/h，扬

程 H=15m，功率 P=0.75kW。

站区室外雨水排水管道管径 D300~D1200，采用钢筋混凝土排水管。布置在道路上及站外的雨水排水检查井采用重型井盖，布置在场地内的雨水排水检查井采用轻型井盖。最终通过预应力钢筋混凝土管 III 阶段管将雨水排至站址的西南侧 6 公里外的拉维河，预应力钢筋混凝土管 III 阶段管管径为 D1200，排放口采用八字式管道出水口，排放口底标高为 186.80m（EGM2008 高程系统）。

The designed rainwater flow in this project station is calculated and determined according to the formula of rainstorm intensity in Lahore area where the station is located:

Formula for storm intensity:

$$i = \frac{8.376(1+1.907\lg p)}{(t+12)^{0.7843}}$$

The design recurrence period is P=3 years and t=20min

Q is calculated to be 175.99 L/s times ha

The area inside the fence is 24ha, the area of the total water in the station is F1 = 24ha, and the runoff coefficient is 1=0.6. Then: rainwater design flow Q1=qφ1F1= 2534.26L/s= 9123.32m^3/h.

The average filling height of the project is about 2.6m, the site is flat, and the average elevation of the ground is about 193.4m after the site is leveled. The rainwater receiving water body (to be implemented) is not enough to adopt gravity flow drainage mode relative to the designed elevation difference in the station, so as to discharge the rainwater and industrial wastewater in the station smoothly. Therefore, this project plans to adopt mechanical pumping. The rain and waste water in the station are firstly discharged into the rainwater pumping station, and then pumped to the ravi river 6km away by the rain pump.

The rainwater in the station area passes through the rainwater mouth, and the rainwater check well flows to the rainwater pipe network in the station area. An underground rain water pump pool is set on the west side of the station area, and there are four horizontal centrifugal pumps in the pump pool, temporarily discharging rainwater to the west side of the station site. A total of 4 rain water pumps (2 large and 2 small) are installed in the rain water pump station.

The rainwater passes through the stormwater orifice and the stormwater inspection well flows to the stormwater pumping station. The storm water pump station is provided with an oblique layout to remove coarse and concentrated sewage and other floating objects in the water source. The whole set of equipment is provided outdoors. The pump station is designed according to the unattended design. The pump is interlocked with the water level of the front pool to automatically put in or shut down in turn.

In order to save water, there are two small pumps in the rain pump room as the green water pump. When the weather is fine, the water in the rain pump pool can be used as the green water for the station area. Model of greening water pump: WQK5-15-0.75,Q=5m^3/h, H=15m, P= 0.75kw.

The pipe diameter of the outdoor rainwater drainage pipe in the station area is D300~D1200, and the reinforced concrete drainage pipe is adopted. Heavy manhole covers are used for storm water drainage inspection Wells arranged on the road and outside the station, while light manhole covers are used for storm water drainage inspection Wells arranged in the site. In the end, the rain water is discharged to ravi river 6 km to the southwest of the site through the prestressed reinforced concrete pipe phase III pipe. The pipe diameter of the prestressed reinforced concrete pipe phase III pipe is D1200, and the discharge outlet adopts the eight-type pipe outlet. The bottom elevation of the discharge outlet is 186.80m (EGM2008 elevation system).